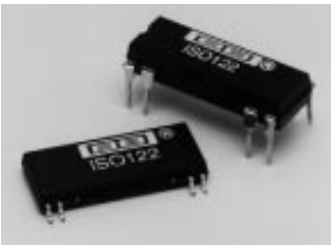

ISO122

Precision Lowest Cost ISOLATION AMPLIFIER

FEATURES

- 100% TESTED FOR HIGH-VOLTAGE BREAKDOWN
- RATED 1500Vrms
- HIGH IMR: 140dB at 60Hz
- BIPOLAR OPERATION: $V_O = \pm 10V$
- 16-PIN PLASTIC DIP AND 28-LEAD SOIC
- EASE OF USE: Fixed Unity Gain Configuration
- 0.020% max NONLINEARITY
- ±4.5V to ±18V SUPPLY RANGE

APPLICATIONS

- INDUSTRIAL PROCESS CONTROL: Transducer Isolator, Isolator for Thermocouples, RTDs, Pressure Bridges, and Flow Meters, 4mA to 20mA Loop Isolation
- GROUND LOOP ELIMINATION
- MOTOR AND SCR CONTROL
- POWER MONITORING
- PC-BASED DATA ACQUISITION
- TEST EQUIPMENT

DESCRIPTION

The ISO122 is a precision isolation amplifier incorporating a novel duty cycle modulation-demodulation technique. The signal is transmitted digitally across a 2pF differential capacitive barrier. With digital modulation the barrier characteristics do not affect signal integrity, resulting in excellent reliability and good high frequency transient immunity across the barrier. Both barrier capacitors are imbedded in the plastic body of the package.

The ISO122 is easy to use. No external components are required for operation. The key specifications are 0.020% max nonlinearity, 50kHz signal bandwidth, and 200µV/°C V_{OS} drift. A power supply range of ±4.5V to ±18V and quiescent currents of ±5.0mA on V_{S1} and ±5.5mA on V_{S2} make these amplifiers ideal for a wide range of applications.

The ISO122 is available in 16-pin plastic DIP and 28-lead plastic surface mount packages.

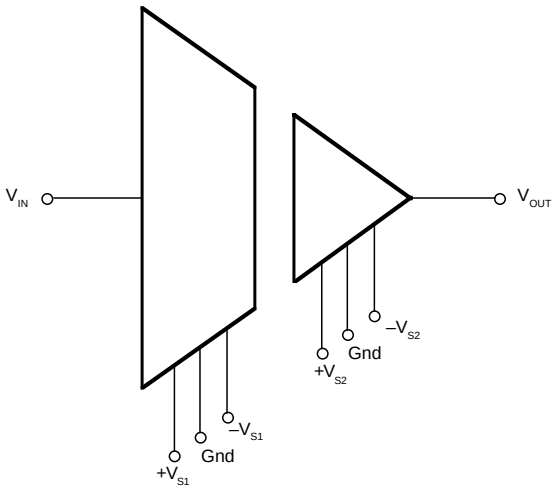

International Airport Industrial Park • Mailing Address: PO Box 11400 • Tucson, AZ 85734 • Street Address: 6730 S. Tucson Blvd. • Tucson, AZ 85706
Tel: (520) 746-1111 • Twx: 910-952-1111 • Cable: BBRCORP • Telex: 066-6491 • FAX: (520) 889-1510 • Immediate Product Info: (800) 548-6132

©1989 Burr-Brown Corporation
PDS-857F
Printed in U.S.A. November, 1993

SPECIFICATIONS

At T_A = +25°C , V_{S1} = V_{S2} = ±15V, and R_L = 2kΩ unless otherwise noted.

		ISO122P/U			ISO122JP/JU			
PARAMETER	**CONDITIONS**	**MIN**	**TYP**	**MAX**	**MIN**	**TYP**	**MAX**	**UNITS**
ISOLATION								
Voltage Rated Continuous AC 60Hz		1500			*			VAC
100% Test (1)	1s, 5pc PD	2400			*			VAC
Isolation Mode Rejection	60Hz		140			*		dB
Barrier Impedance			10^{14} || 2			*		Ω || pF
Leakage Current at 60Hz	V_{ISO} = 240Vrms		0.18	0.5		*	*	µArms
GAIN	V_O = ±10V							
Nominal Gain			1			*		V/V
Gain Error			±0.05	±0.50		*	*	%FSR
Gain vs Temperature			±10			*		ppm/°C
Nonlinearity(2)			±0.016	±0.020		±0.025	±0.050	%FSR
INPUT OFFSET VOLTAGE								
Initial Offset			±20	±50		*	*	mV
vs Temperature			±200			*		µV/°C
vs Supply			±2			*		mV/V
Noise			4			*		µV/√Hz
INPUT								
Voltage Range		±10	±12.5		*	*		V
Resistance			200			*		kΩ
OUTPUT								
Voltage Range		±10	±12.5		*	*		V
Current Drive		±5	±15		*	*		mA
Capacitive Load Drive			0.1			*		µF
Ripple Voltage(3)			20			*		mVp-p
FREQUENCY RESPONSE								
Small Signal Bandwidth			50			*		kHz
Slew Rate			2			*		V/µs
Settling Time	V_O = ±10V							
0.1%			50			*		µs
0.01%			350			*		µs
Overload Recover Time			150			*		µs
POWER SUPPLIES								
Rated Voltage			±15			*		V
Voltage Range		±4.5		±18	*		*	V
Quiescent Current: V_{S1}			±5.0	±7.0		*	*	mA
V_{S2}			±5.5	±7.0		*	*	mA
TEMPERATURE RANGE								
Specification		–25		+85	*		*	°C
Operating		–25		+85	*		*	°C
Storage		–40		+85	*		*	°C
θ_{JA}			100			*		°C/W
θ_{JC}			65			*		°C/W

* Specification same as ISO122P/U.

NOTES: (1) Tested at 1.6 X rated, fail on 5pC partial discharge. (2) Nonlinearity is the peak deviation of the output voltage from the best-fit straight line. It is expressed as the ratio of deviation to FSR. (3) Ripple frequency is at carrier frequency (500kHz).

The information provided herein is believed to be reliable; however, BURR-BROWN assumes no responsibility for inaccuracies or omissions. BURR-BROWN assumes no responsibility for the use of this information, and all use of such information shall be entirely at the user's own risk. Prices and specifications are subject to change without notice. No patent rights or licenses to any of the circuits described herein are implied or granted to any third party. BURR-BROWN does not authorize or warrant any BURR-BROWN product for use in life support devices and/or systems.

CONNECTION DIAGRAM

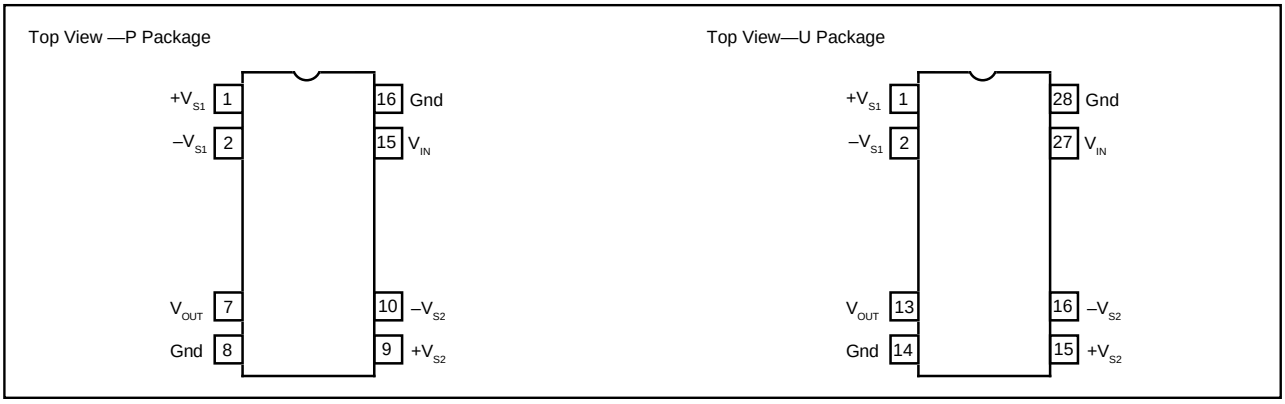

PACKAGE INFORMATION[1]

MODEL	PACKAGE	PACKAGE DRAWING NUMBER
ISO122P	16-Pin Plastic DIP	238
ISO122JP	16-Pin Plastic DIP	238
ISO122U	28-Pin Plastic SOIC	217-1
ISO122JU	28-Pin Plastic SOIC	217-1

NOTE: (1) For detailed drawing and dimension table, please see end of data sheet, or Appendix D of Burr-Brown IC Data Book.

ABSOLUTE MAXIMUM RATINGS

Supply Voltage	±18V
V_{IN}	±100V
Continuous Isolation Voltage	1500Vrms
Junction Temperature	+150°C
Storage Temperature	+85°C
Lead Temperature (soldering, 10s)	+300°C
Output Short to Common	Continuous

ORDERING INFORMATION

MODEL	PACKAGE	NONLINEARITY MAX %FSR
ISO122P	Plastic DIP	±0.020
ISO122JP	Plastic DIP	±0.050
ISO122U	Plastic SOIC	±0.020
ISO122JU	Plastic SOIC	±0.050

TYPICAL PERFORMANCE CURVES

T_A = +25°C, V_S = ±15V unless otherwise noted.

SINE RESPONSE
(f = 2kHz)

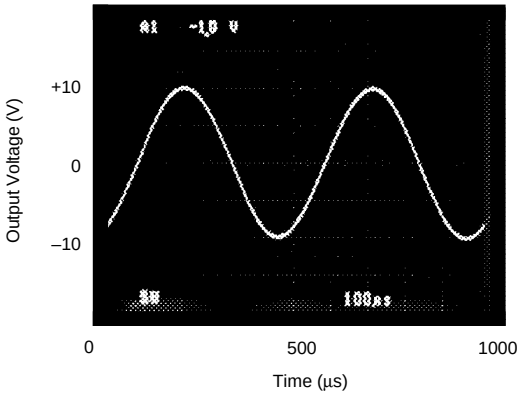

SINE RESPONSE
(f = 20kHz)

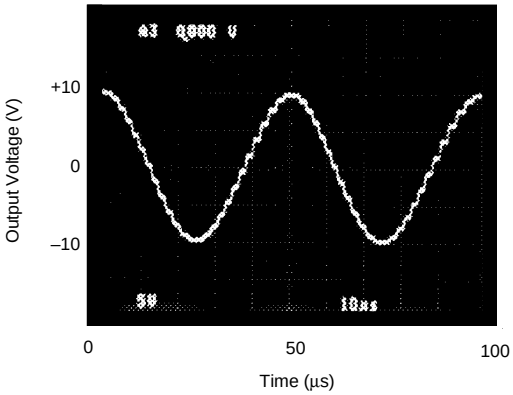

STEP RESPONSE

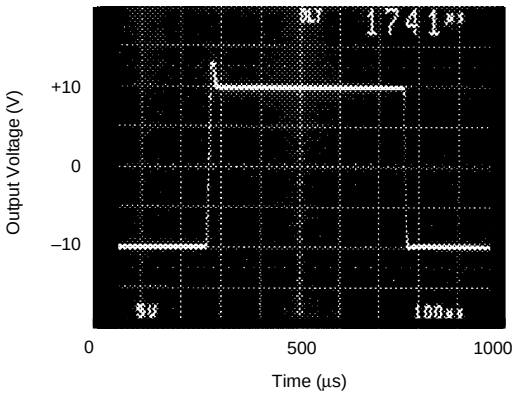

STEP RESPONSE

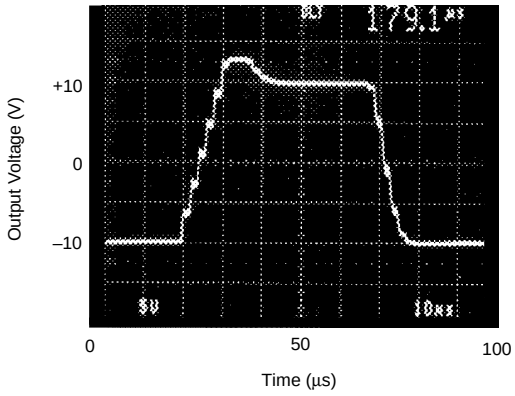

ISOLATION VOLTAGE
vs FREQUENCY

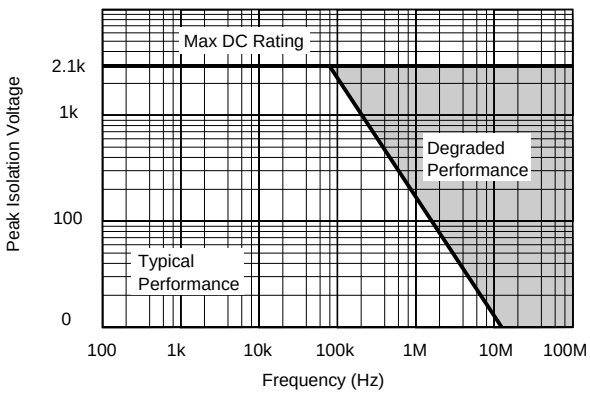

IMR vs FREQUENCY

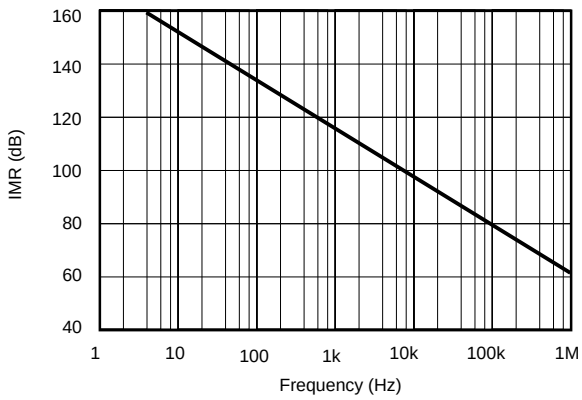

TYPICAL PERFORMANCE CURVES

T_A = +25°C, V_S = ±15V unless otherwise noted.

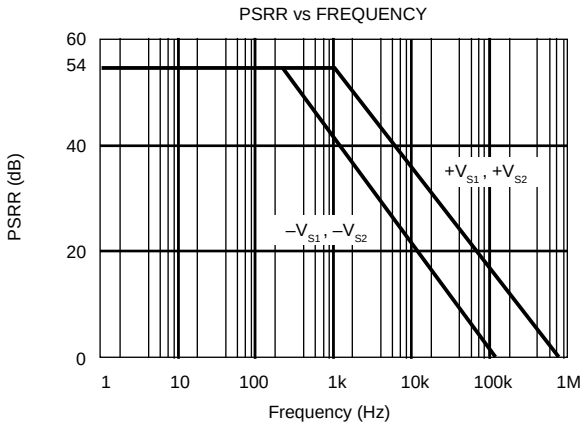

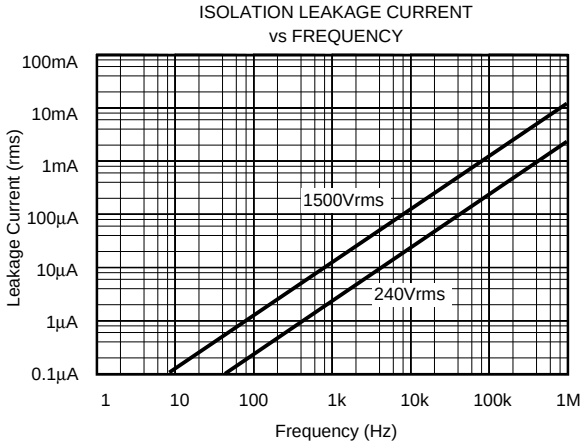

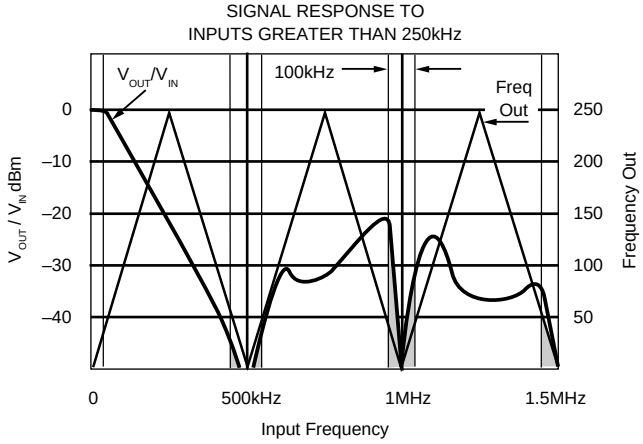

(NOTE: Shaded area shows aliasing frequencies that cannot be removed by a low-pass filter at the output.)

THEORY OF OPERATION

The ISO122 isolation amplifier uses an input and an output section galvanically isolated by matched 1pF isolating capacitors built into the plastic package. The input is duty-cycle modulated and transmitted digitally across the barrier. The output section receives the modulated signal, converts it back to an analog voltage and removes the ripple component inherent in the demodulation. Input and output sections are fabricated, then laser trimmed for exceptional circuitry matching common to both input and output sections. The sections are then mounted on opposite ends of the package with the isolating capacitors mounted between the two sections. The transistor count of the ISO122 is 250 transistors.

MODULATOR

An input amplifier (A1, Figure 1) integrates the difference between the input current (V_{IN}/200kΩ) and a switched ±100µA current source. This current source is implemented by a switchable 200µA source and a fixed 100µA current sink. To understand the basic operation of the modulator, assume that V_{IN} = 0.0V. The integrator will ramp in one direction until the comparator threshold is exceeded. The comparator and sense amp will force the current source to switch; the resultant signal is a triangular waveform with a 50% duty cycle. The internal oscillator forces the current source to switch at 500kHz. The resultant capacitor drive is a complementary duty-cycle modulation square wave.

DEMODULATOR

The sense amplifier detects the signal transitions across the capacitive barrier and drives a switched current source into integrator A2. The output stage balances the duty-cycle modulated current against the feedback current through the 200kΩ feedback resistor, resulting in an average value at the V_{OUT} pin equal to V_{IN}. The sample and hold amplifiers in the output feedback loop serve to remove undesired ripple voltages inherent in the demodulation process.

BASIC OPERATION

SIGNAL AND SUPPLY CONNECTIONS

Each power supply pin should be bypassed with 1µF tantalum capacitors located as close to the amplifier as possible. The internal frequency of the modulator/demodulator is set at 500kHz by an internal oscillator. Therefore, if it is desired to minimize any feedthrough noise (beat frequencies) from a DC/DC converter, use a π filter on the supplies (see Figure 4). ISO122 output has a 500kHz ripple of 20mV, which can be removed with a simple two pole low-pass filter with a 100kHz cutoff using a low cost op amp. See Figure 4.

The input to the modulator is a current (set by the 200kΩ integrator input resistor) that makes it possible to have an input voltage greater than the input supplies, as long as the output supply is at least ±15V. It is therefore possible when using an unregulated DC/DC converter to minimize PSR related output errors with ±5V voltage regulators on the isolated side and still get the full ±10V input and output swing. An example of this application is shown in Figure 10.

CARRIER FREQUENCY CONSIDERATIONS

The ISO122 amplifier transmits the signal across the isolation barrier by a 500kHz duty cycle modulation technique. For input signals having frequencies below 250kHz, this system works like any linear amplifier. But for frequencies above 250kHz, the behavior is similar to that of a sampling amplifier. The signal response to inputs greater than 250kHz

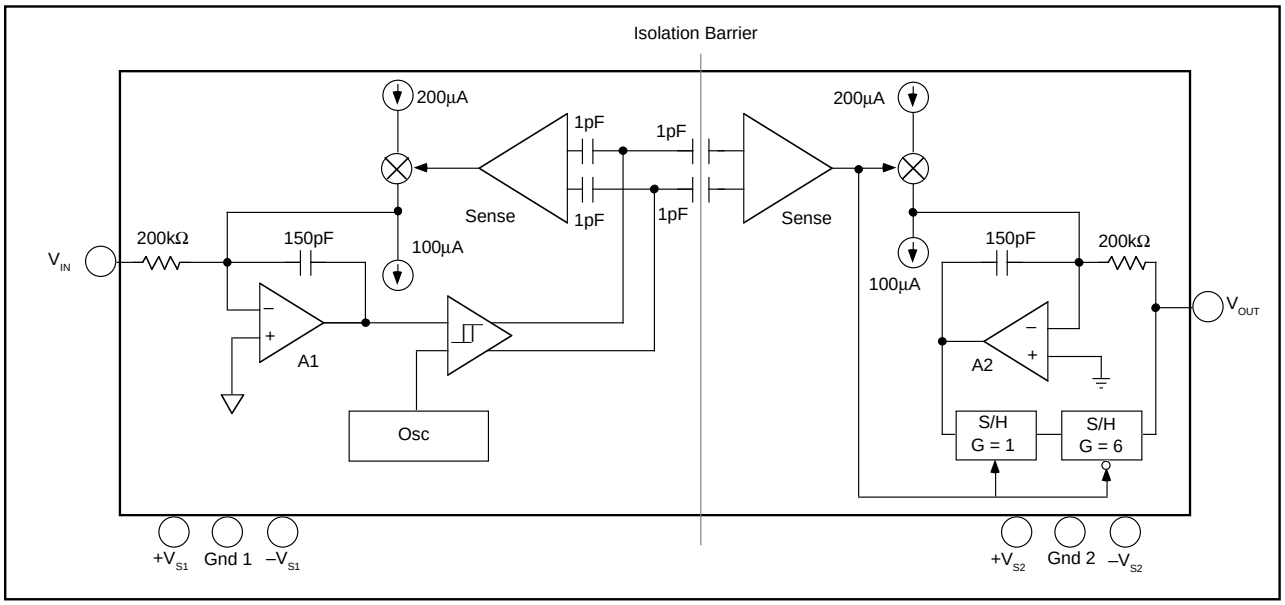

FIGURE 1. Block Diagram.

performance curve shows this behavior graphically; at input frequencies above 250kHz the device generates an output signal component of reduced magnitude at a frequency below 250kHz. This is the aliasing effect of sampling at frequencies less than 2 times the signal frequency (the Nyquist frequency). Note that at the carrier frequency and its harmonics, both the frequency and amplitude of the aliasing go to zero.

ISOLATION MODE VOLTAGE INDUCED ERRORS

IMV can induce errors at the output as indicated by the plots of IMV vs Frequency. It should be noted that if the IMV frequency exceeds 250kHz, the output also will display spurious outputs (aliasing), in a manner similar to that for V_{IN} > 250kHz and the amplifier response will be identical to that shown in the Signal Response to Inputs Greater Than 250kHz performance curve. This occurs because IMV-induced errors behave like input-referred error signals. To predict the total error, divide the isolation voltage by the IMR shown in the IMR vs Frequency curve and compute the amplifier response to this input-referred error signal from the data given in the Signal Response to Inputs Greater than 250kHz performance curve. For example, if a 800kHz 1000Vrms IMR is present, then a total of [(–60dB) + (–30dB)] x (1000V) = 32mV error signal at 200kHz plus a 1V, 800kHz error signal will be present at the output.

HIGH IMV dV/dt ERRORS

As the IMV frequency increases and the dV/dt exceeds 1000V/µs, the sense amp may start to false trigger, and the output will display spurious errors. The common mode current being sent across the barrier by the high slew rate is the cause of the false triggering of the sense amplifier. Lowering the power supply voltages below ±15V may decrease the dV/dt to 500V/µs for typical performance.

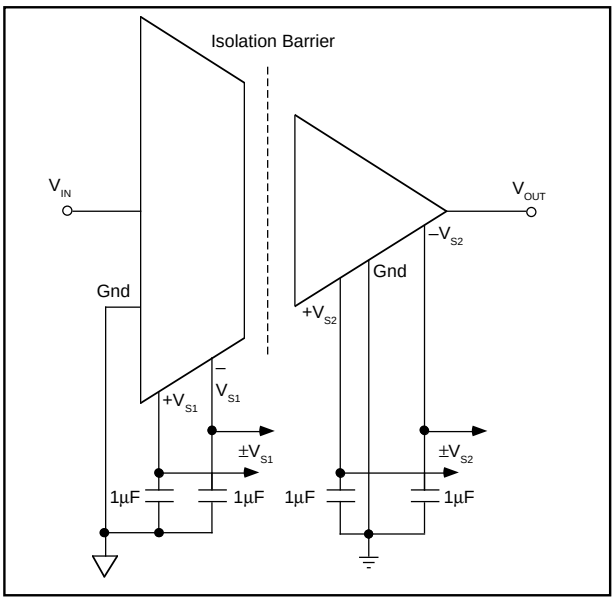

FIGURE 2. Basic Signal and Power Connections.

HIGH VOLTAGE TESTING

Burr-Brown Corporation has adopted a partial discharge test criterion that conforms to the German VDE0884 Optocoupler Standards. This method requires the measurement of minute current pulses (<5pC) while applying 2400Vrms, 60Hz high voltage stress across every ISO122 isolation barrier. No partial discharge may be initiated to pass this test. This criterion confirms transient overvoltage (1.6 x 1500Vrms) protection without damage to the ISO122. Lifetest results verify the absence of failure under continuous rated voltage and maximum temperature.

This new test method represents the "state of the art" for non-destructive high voltage reliability testing. It is based on the effects of non-uniform fields that exist in heterogeneous dielectric material during barrier degradation. In the case of void non-uniformities, electric field stress begins to ionize the void region before bridging the entire high voltage barrier. The transient conduction of charge during and after the ionization can be detected externally as a burst of 0.01-0.1µs current pulses that repeat on each AC voltage cycle. The minimum AC barrier voltage that initiates partial discharge is defined as the "inception voltage." Decreasing the barrier voltage to a lower level is required before partial discharge ceases and is defined as the "extinction voltage." We have characterized and developed the package insulation processes to yield an inception voltage in excess of 2400Vrms so that transient overvoltages below this level will not damage the ISO122. The extinction voltage is above 1500Vrms so that even overvoltage induced partial discharge will cease once the barrier voltage is reduced to the 1500Vrms (rated) level. Older high voltage test methods relied on applying a large enough overvoltage (above rating) to break down marginal parts, but not so high as to damage good ones. Our new partial discharge testing gives us more confidence in barrier reliability than breakdown/no breakdown criteria.

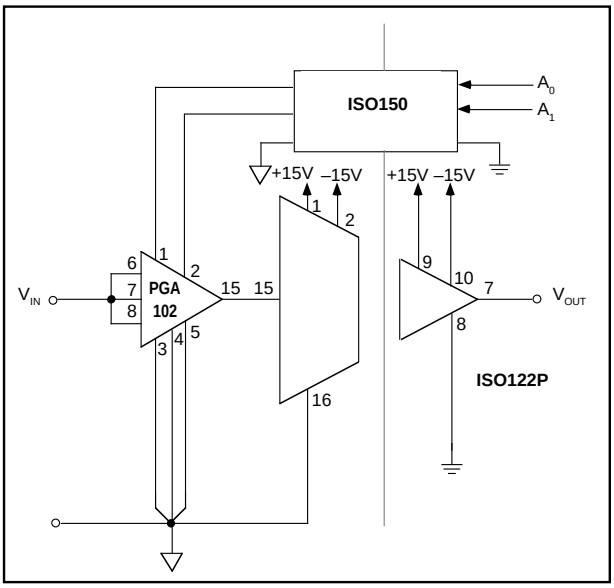

FIGURE 3. Programmable-Gain Isolation Channel with Gains of 1, 10, and 100.

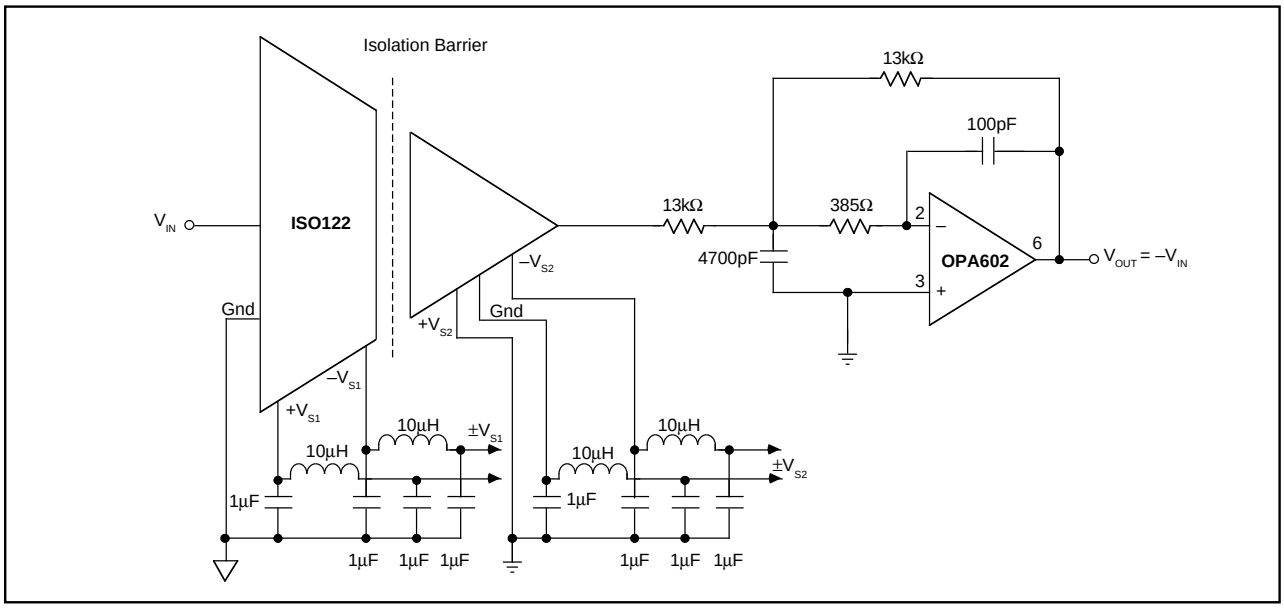

FIGURE 4. Optional π Filter to Minimize Power Supply Feedthrough Noise; Output Filter to Remove 500kHz Carrier Ripple. For more information concerning output filter refer to AB-023.

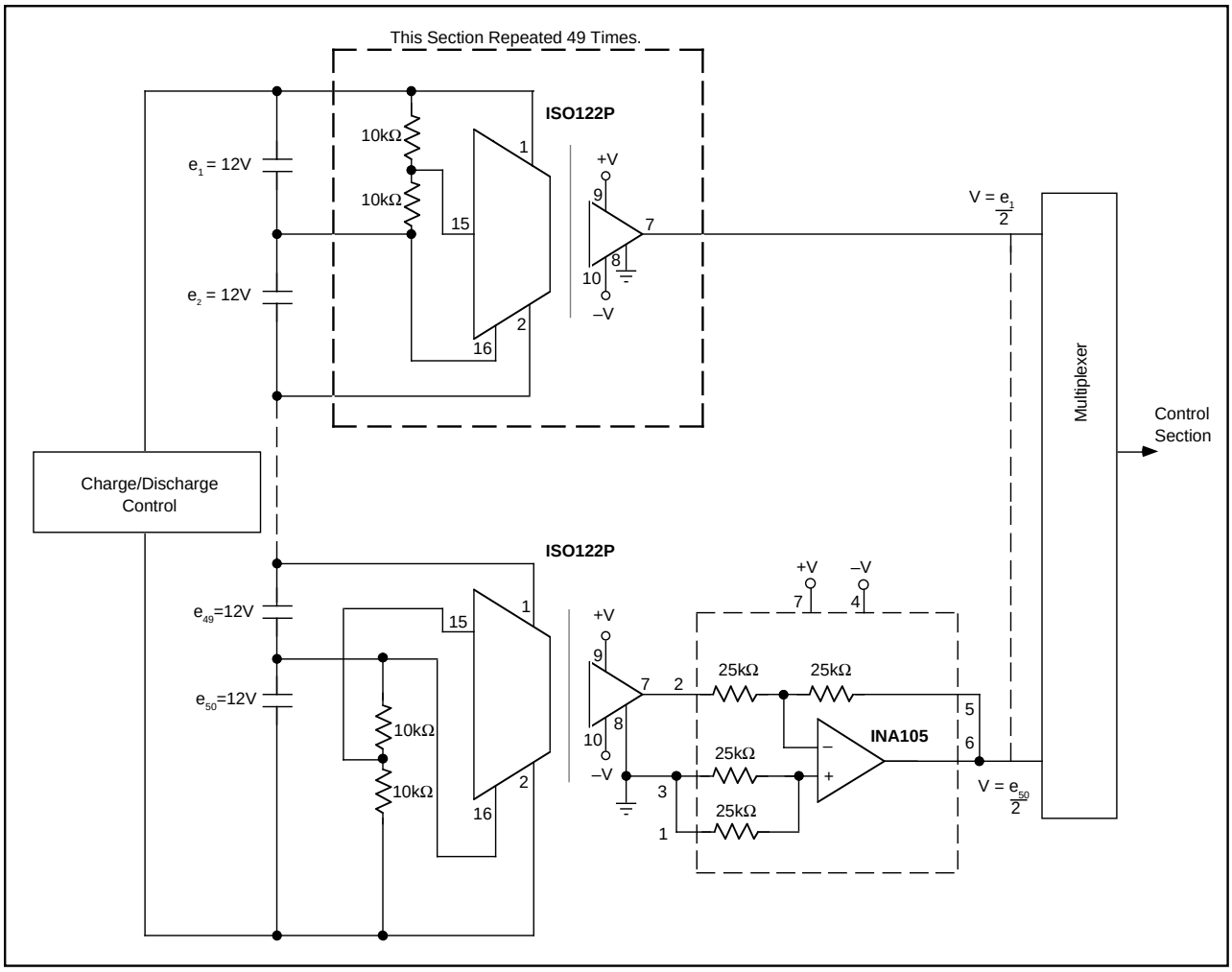

FIGURE 5. Battery Monitor for a 600V Battery Power System. (Derives Input Power from the Battery.)

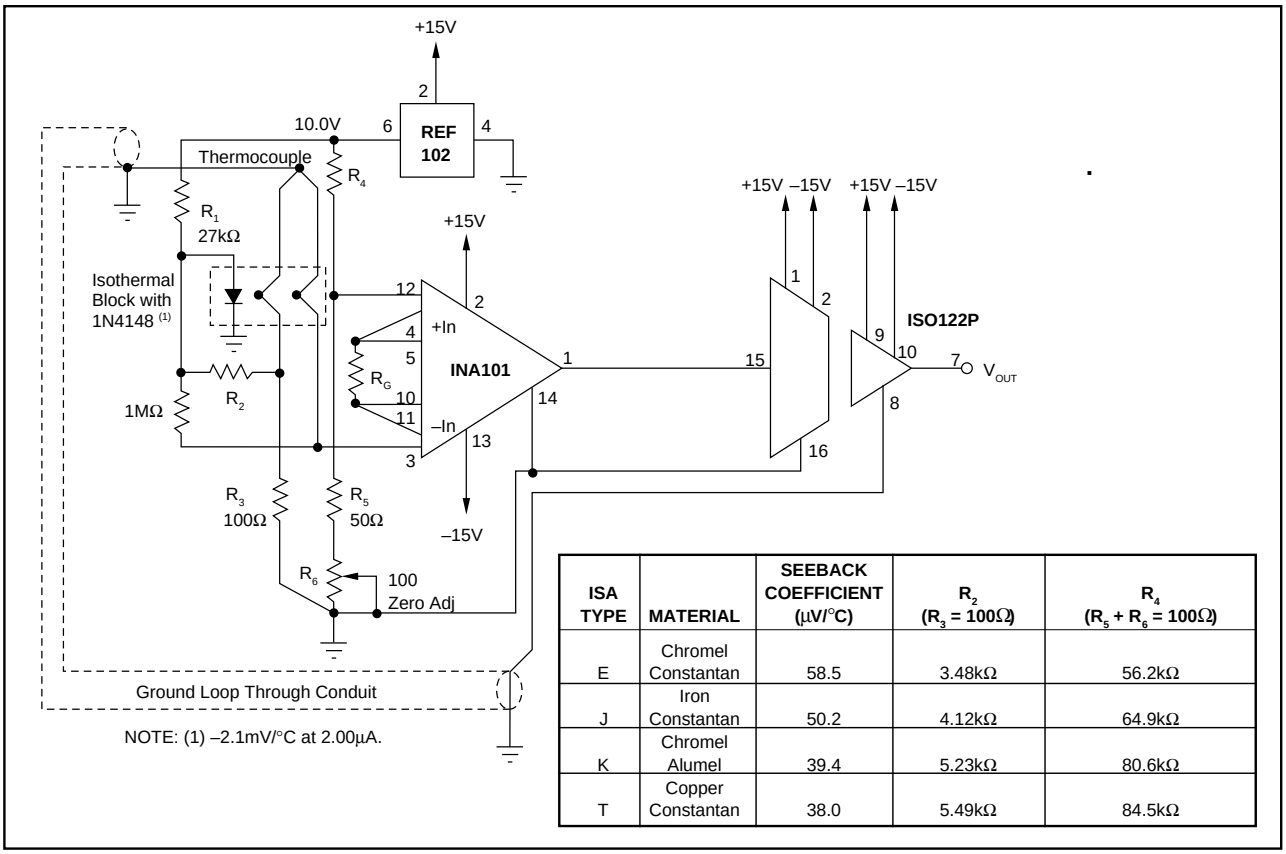

ISA TYPE	MATERIAL	SEEBACK COEFFICIENT (µV/°C)	R_2 (R_3 = 100Ω)	R_4 (R_5 + R_6 = 100Ω)
E	Chromel Constantan	58.5	3.48kΩ	56.2kΩ
J	Iron Constantan	50.2	4.12kΩ	64.9kΩ
K	Chromel Alumel	39.4	5.23kΩ	80.6kΩ
T	Copper Constantan	38.0	5.49kΩ	84.5kΩ

FIGURE 6. Thermocouple Amplifier with Ground Loop Elimination, Cold Junction Compensation, and Up-scale Burn-out.

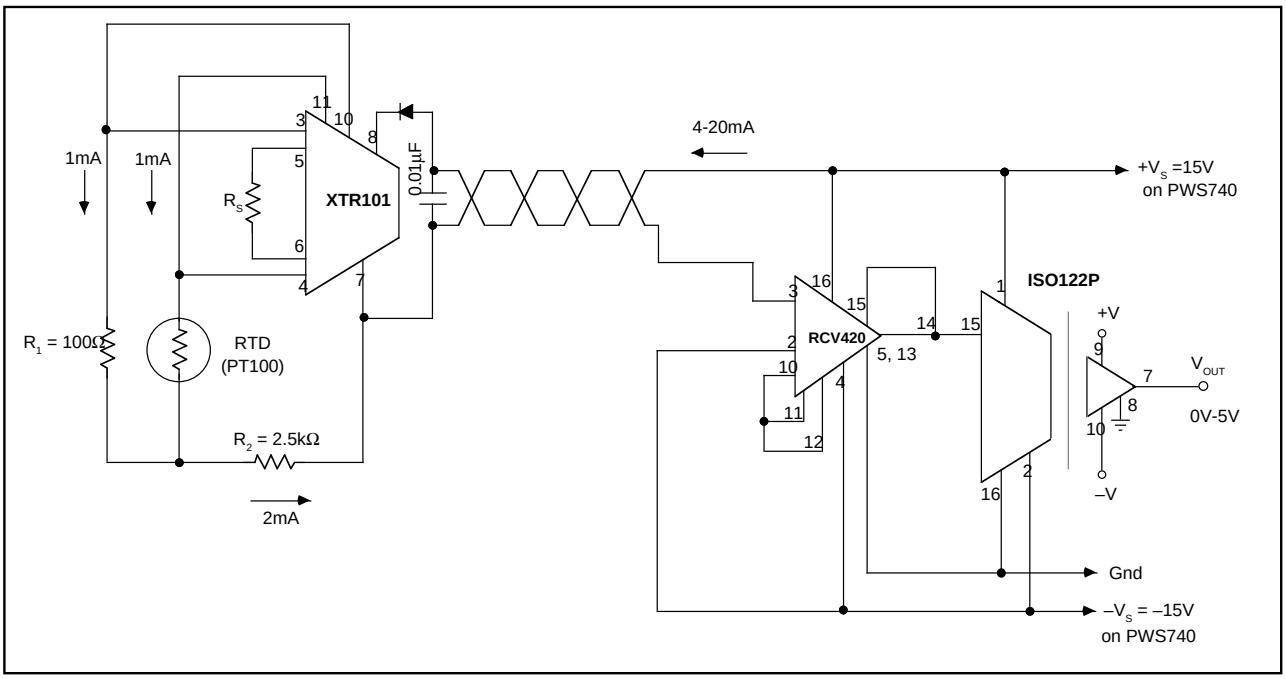

FIGURE 7. Isolated 4-20mA Instrument Loop. (RTD shown.)

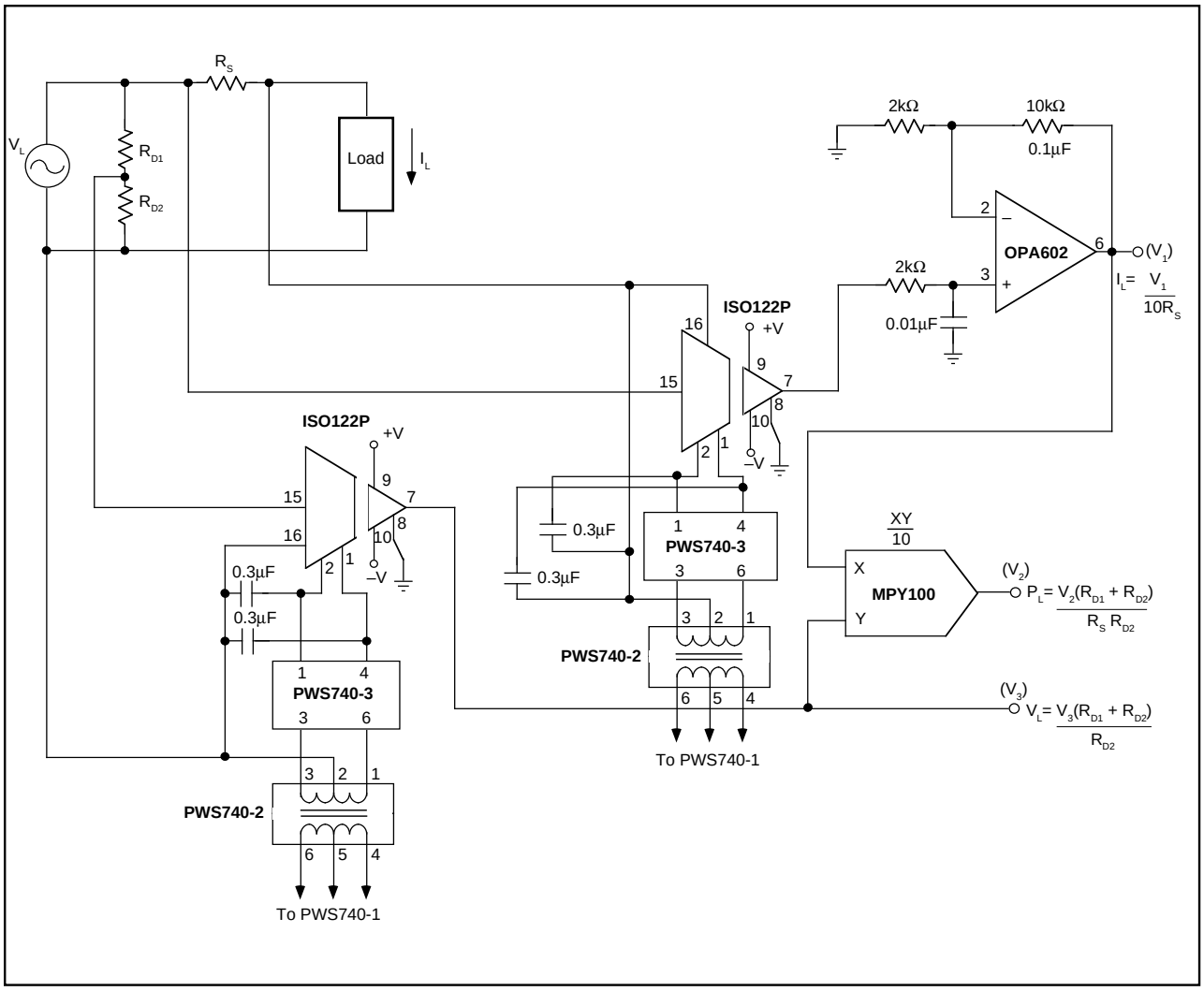

FIGURE 8. Isolated Power Line Monitor.

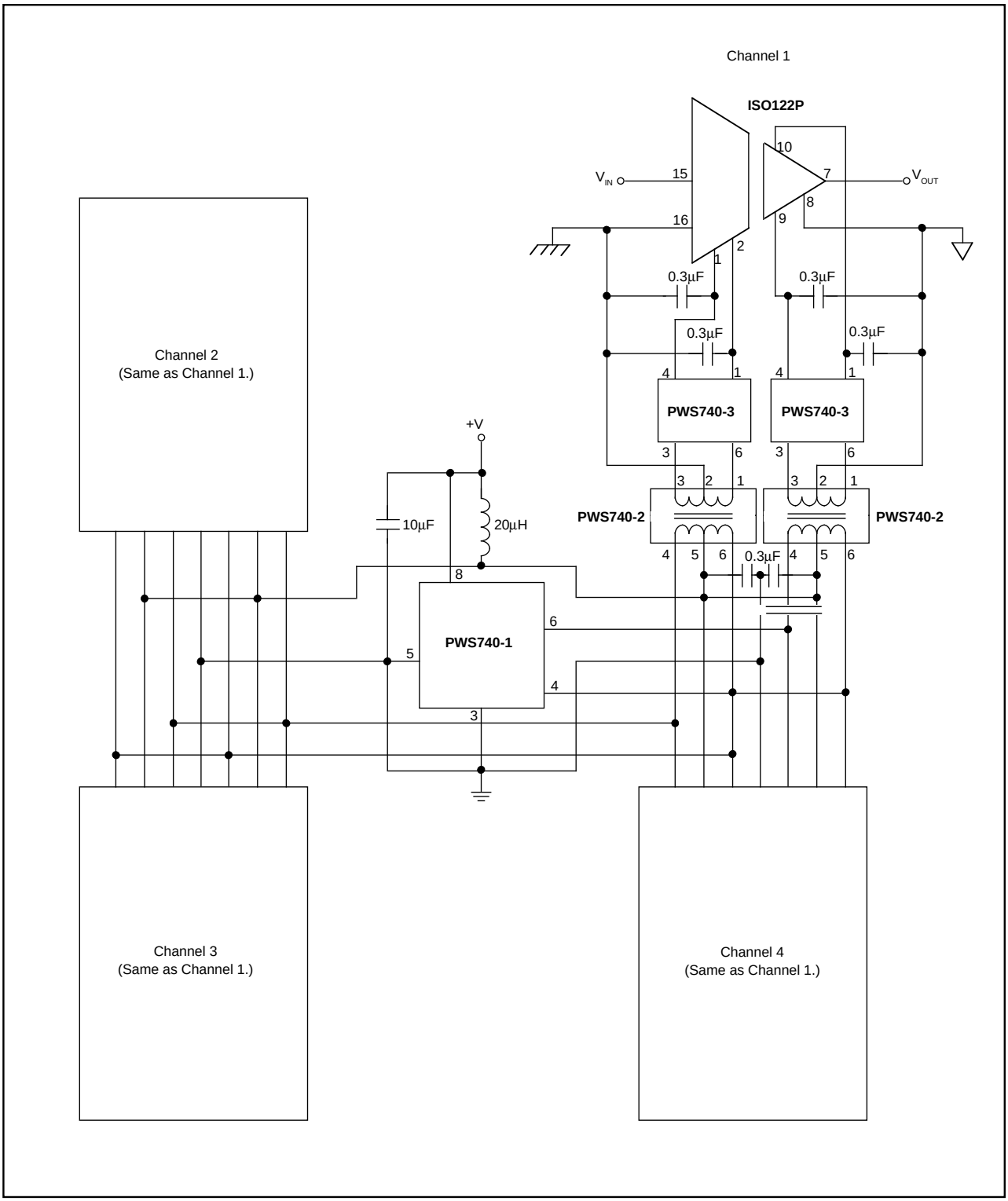

FIGURE 9. Three-Port, Low-Cost, Four-Channel Isolated, Data Acquisition System.

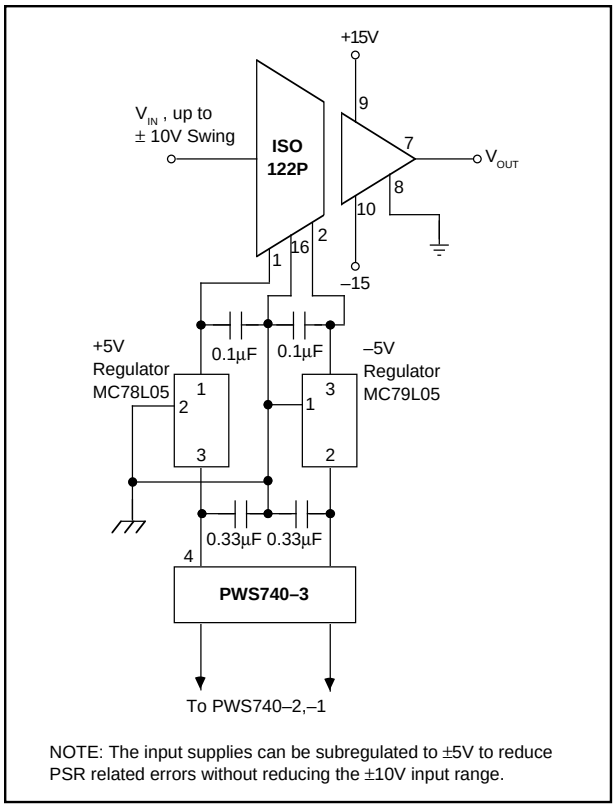

FIGURE 10. Improved PSR Using External Regulator.

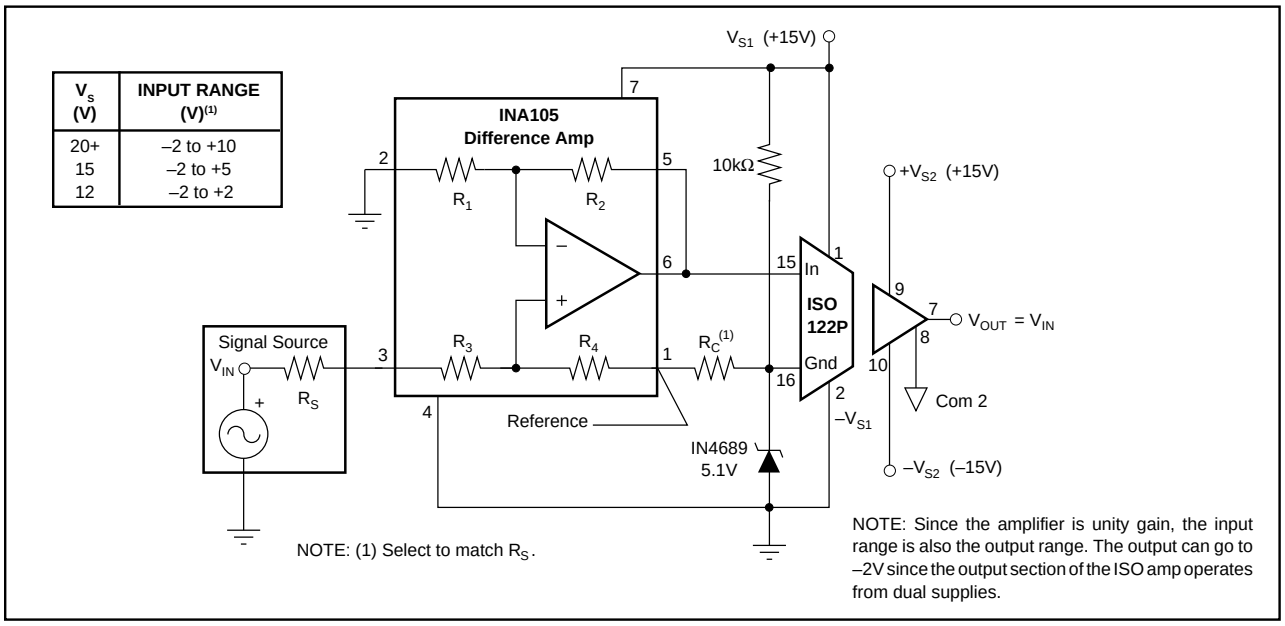

V_s (V)	INPUT RANGE (V)(1)
20+	–2 to +10
15	–2 to +5
12	–2 to +2

FIGURE 11. Single Supply Operation of the ISO122P Isolation Amplifier. For additional information see AB-009.

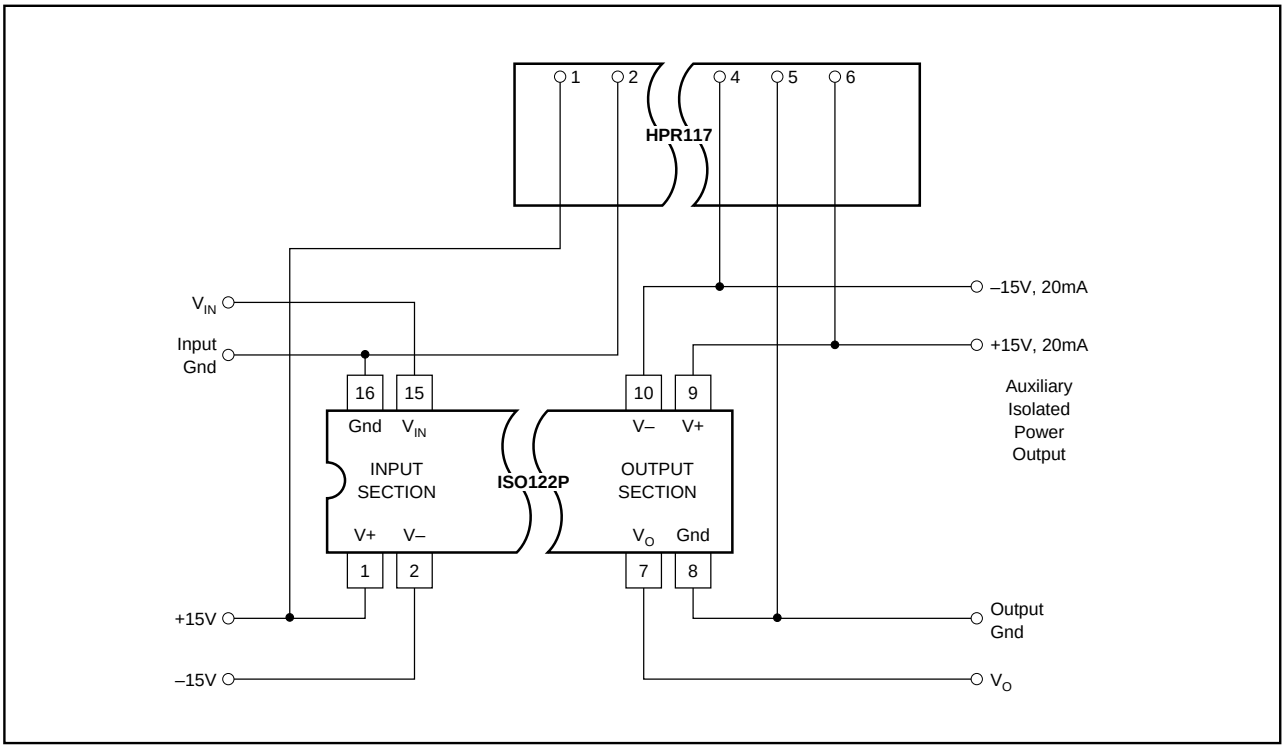

FIGURE 12. Input-Side Powered ISO Amp. For additional information refer to AB-024.

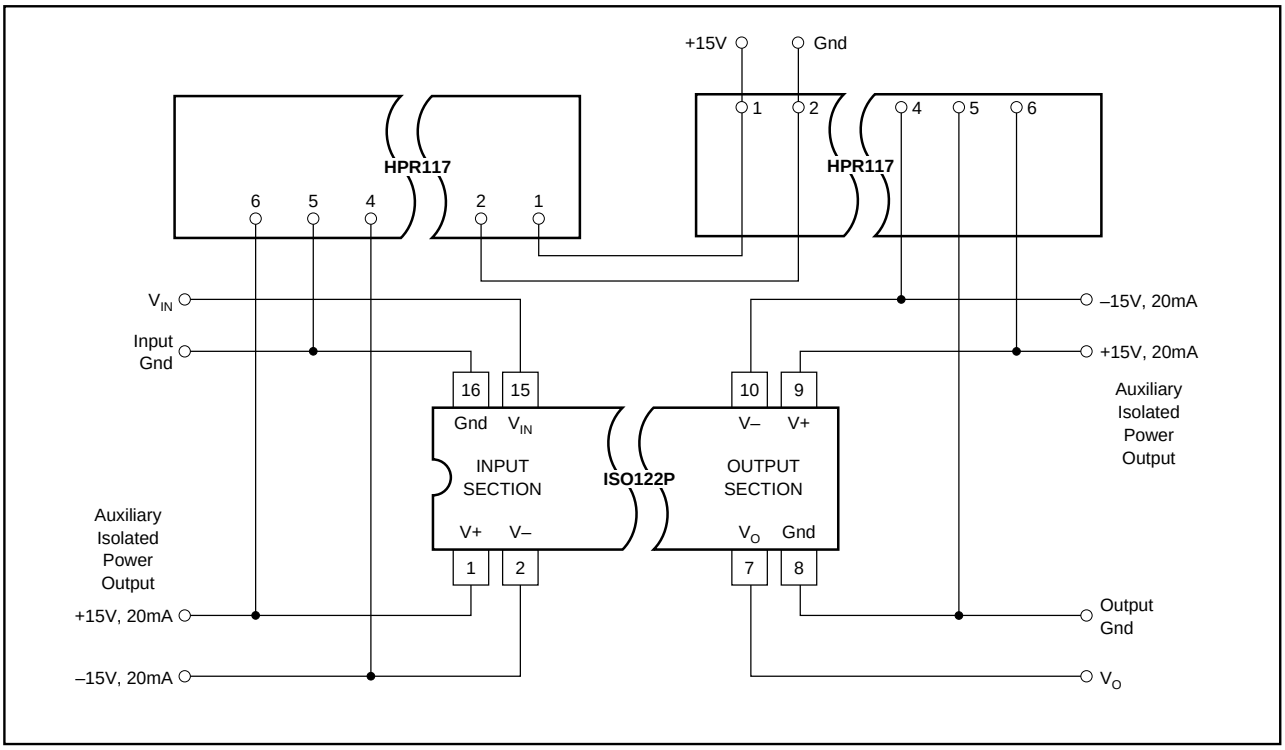

FIGURE 13. Powered ISO Amp with Three-Port Isolation. For additional information refer to AB-024.

MECHANICALS

Package Number 238 — Single Wide 16-Pin Plastic DIP

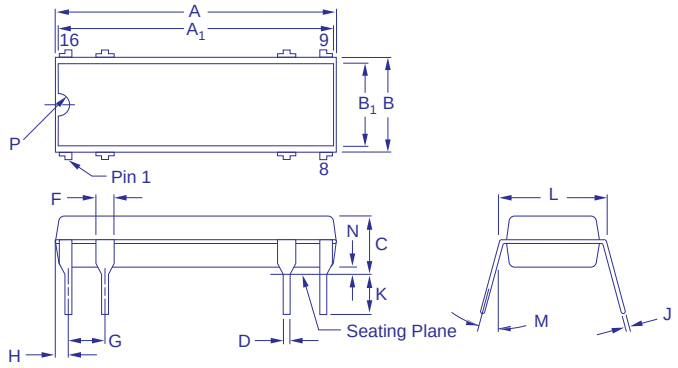

	INCHES		MILLIMETERS	
DIM	MIN	MAX	MIN	MAX
A	.740	.800	18.80	20.32
A_1	.725	.785	18.42	19.94
B	.230	.290	5.85	7.38
B_1	.200	.250	5.09	6.36
C	.120	.200	3.05	5.09
D	.015	.023	0.38	0.59
F	.030	.070	0.76	1.78
G	.100 BASIC		2.54 BASIC	
H	.020	.050	0.51	1.27
J	.008	.015	0.20	0.38
K	.070	.150	1.78	3.82
L	.300 BASIC		7.63 BASIC	
M	0°	15°	0°	15°
N	.010	.030	0.25	0.76
P	.025	.050	0.64	1.27

NOTE: Leads in true position within 0.01" (0.25mm) R at MMC at seating plane.

Package Number 217-1 — 28-Pin Plastic SOIC

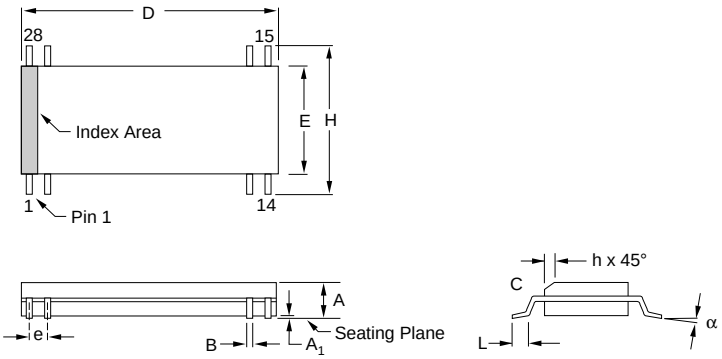

	INCHES		MILLIMETERS	
DIM	MIN	MAX	MIN	MAX
A	.093	.104	2.36	2.64
A_1	.004	.011	0.10	0.28
B	.014	.019	0.36	0.48
C	.0095	.012	0.24	0.30
D(2)	.697	.712	17.70	18.08
E(2)	.292	.299	7.42	7.59
e	.050 BASIC		1.27 BASIC	
H	.394	.419	10.01	10.64
h(3)	.010	.029	0.25	0.74
L(4)	.016	.050	0.41	1.27
N(5)	8		8	
α	0°	8°	0°	8°

NOTES:

1.Dimensioning and tolerancing per ANSI Y14.5M-1982.

2. "D" and "E" do not include mold flash or protrusions. Mold flash or protrusions shall not exceed 0.15mm (.086 in).

3. The chamfer on the body is optional. If it is not present, a visual index feature must be located within the crosshatched area.

4. "L" is the length of terminal for soldering to a substrate.

5. "N" is the number of terminal positions.

6. Lead to lead coplanarity shall be less than .004 inches from the seating plane.